# Industrial IXLdp Ultra-Low Variable Capacitance Pressure Transducer/Transmitter

***APPLICATIONS:***

***HVAC, fume hood control, lab/clean room pressurization, laminar flow, furnace/stack draft, leak detection, medical, fan tracking, filter monitoring, glovebox and velocity measurements***

***BENEFITS & FEATURES:***

- ***Certified 0.25% and 0.5% accuracy***
- ***0.1˝-200˝-$H_2O$ pressure ranges***
- ***High overload protection***
- ***FM approved for hazardous locations***
- ***NEMA 4X metal construction***
- ***Six types of output signals available***
- ***Easy installation***
- ***On-board voltage regulation allows use of lower cost, non-precise, unregulated power supply***

The Ashcroft® Industrial IXLdp was designed for the measurement and control of very low pressure and flow in industrial and process plant environments. The Industrial IXLdp transmitter features a rugged NEMA 4X enclosure, built-in electrical terminal box isolated from the electronics and threaded process connections.

The Ashcroft IXLdp transmitter utilizes a state-of-the-art variable capacitance sensor with a glass-clad silicon chip. The Si-Glas™ technology combines the inherent high sensitivity of a variable capacitance transducer with the repeatability of a micro-machined, single-crystal silicon diaphragm.

**3 Year Warranty**

The Si-Glas sensor is composed of sputtered metals and glass molecularly bonded to silicon. There are no epoxies or other organics in the sensor to contribute to drift or mechanical degradation over time.

## PERFORMANCE CHARACTERISTICS

| **Accuracy Class (F.S.):** | **0.25%** | **0.50%** |
|---|---|---|
| Non-linearity | | |
| Terminal point* | ±0.2% | ±0.4% |
| Best fit straight line (BFSL) | ±0.15% | ±0.3% |
| Hysteresis | ±0.02% | ±0.02% |
| Non-repeatability | ±0.03% | ±0.05% |

*Includes Hysteresis

**Stability – Max. Change (F.S./year):** ±0.5 %

**Standard Ranges (Inches W.C.)**

**Unidirectional Ranges:**

Differential or Gage

| | | | |
|---|---|---|---|
| 0/0.1 | 0/2.0 | 0/10 | 0/50 |
| 0/0.25 | 0/2.5 | 0/15 | 0/100 |
| 0/0.50 | 0/3.0 | 0/20 | 0/150 |
| 0/1.0 | 0/5.0 | 0/25 | 0/200 |

**Bidirectional Ranges:**

Compound

| | | | |
|---|---|---|---|
| ±0.05 | ±0.5 | ± 5.0 | ± 25.0 |
| ±0.10 | ±1.0 | ±10.0 | ± 50.0 |
| ±0.20 | ±2.0 | ±15.0 | ±100.0 |
| ±0.25 | ±2.5 | ±20.0 | |

**Custom Ranges:** Special range calibrations (XCL) – consult factory

**Response Time: Standard:** 250ms

(Consult factory for damping options)

Optional variable damping (0-30 sec) (X1D)

## ENVIRONMENTAL CHARACTERISTICS

**Temperature Limits:**

Storage: –40 to 210°F

Operating: –20 to 185°F (0-95% relative humidity)

Compensated: 0 to 160°F

**Thermal Coefficients:**

| | **0.25% Acc.** | **0.5% Acc.** |
|---|---|---|
| ZERO | ±0.01%F.S./°F | ±0.02%F.S./°F |
| SPAN | ±0.01%F.S./°F | ±0.02%F.S./°F |

**Vibration Sweep:**

Less than 0.2%F.S./g temporary effect 10-130 Hz

## FUNCTIONAL CHARACTERISTICS

**Overpressure Limits:**

Proof: 20 psid

Burst differential pressure: 50 psid

Maximum static (line) pressure: 100 psi

Static pressure effect: less than 0.5% F.S.

**Mounting Position Effect:**

| | |
|---|---|
| 1˝W.C. and higher | 0.1% F.S./g |
| 0.25˝ up to 0.5" W.C. | 0.5% F.S./g |
| 0.1˝W.C. | 0.8% F.S./g |

**Note:** Calibrated horizontally standard unless otherwise specified. Mounting Position Effect easily corrected with zero potentiometer.

## ELECTRICAL SPECIFICATIONS

**Output Signal:**

Current: 4-20mA two wire current loop

Voltage: All voltage outputs are 3 wire

0-5 Vdc 1-6 Vdc ±5 Vdc

1-5 Vdc ±2.5 Vdc

**Output Signal is Independent of Power Supply Changes:** 12-36 Vdc range without effect on output signal

**Reverse Wiring Protected**

**Internal Zero and Span:** ±10% F.S. Adjustment

**Supply Current:** 2.6mA typical for voltage output

**Warm-up Time:**

Full specification: Less than one second

**Turndown & Variable Damping Optional**

## PHYSICAL CHARACTERISTICS

**Enclosure:**

NEMA 4X, 300 series stainless steel

**Process Connections:** Two ¼ NPT female

**Electrical Connections:** Two ½˝ female electrical conduit connections isolated from the electronics. Separate access cover for terminal connections

**Media:** Clean, dry and noncorrosive gas (consult factory for use on other media)

NOT FOR USE ON LIQUIDS

## OPTIONS

(X41) – 5:1 Turndown

(X1D) – Variable dampening (0-30 sec.)

(XNH) – Paper tag

(XCL) – Custom pressure range calibration

(XFM) – FM approval

- Consult factory on other pressure range, temperature compensation, packaging variations or response times

Factory Mutual FM approvals intrinsically safe for use in:

Class I, Div. 1, Groups A, B, C, D

Class II, Div. 1, Groups E, F, G

Class III, Div. 1, when wired in accordance with Dresser drawings 71B241 (1-3)

FM option cannot be combined with options X41 or X1D.

## TO ORDER THIS TYPE IXLdp TRANSDUCER/TRANSMITTER:

I X | | F 0 2 | | | S T | | | | | | X F M

**Select:**

1. **Type Configuration (XLdp)**
2. **Accuracy/TC**
   **(3)** 0.25%, ±0.01%/°F **(5)** 0.50%, ±0.02%/°F
3. **Pressure Connection**
   **(F02)** ¼ NPT-Female
4. **Output Signal**
   **(05)** 0/5 Vdc **(15)** 1/5 Vdc **(16)** 1/6 Vdc **(25)** ±2.5 Vdc **(50)** ±5.0 Vdc **(42)** 4-20mA
5. **Electrical Terminal**
   **(ST)** Screw Termination
6. **Pressure Range**
   **Diff. or Gauge: (P1IW)** 0.10˝W.C. **(P25IW)** 0.25˝W.C. **(P5IW)** 0.50˝W.C. **(1IW)** 1.00˝W.C. **(2IW)** 2.00˝W.C. **(2P5IW)** 2.50˝W.C. **(3IW)** 3.00˝W.C. **(5IW)** 5.00˝W.C. **(10IW)** 10.00˝W.C. **(15IW)** 15.00˝W.C. **(20IW)** 20.00˝W.C. **(25IW)** 25.00˝W.C. **(50IW)** 50.00˝W.C. **(100IW)** 100.00˝W.C. **(150IW)** 150.00˝W.C. **(200IW)** 200.00˝W.C.

   **Compound: (P05IWL)** ±0.05˝W.C. **(P1IWL)** ±0.10˝W.C. **(P2IWL)** ±0.20˝W.C. **(P25IWL)** ±0.25˝W.C. **(P5IWL)** ±0.5˝W.C. **(1IWL)** ±1.00˝W.C. **(2IWL)** ±2.00˝W.C. **(2P5IWL)** ±2.50˝W.C. **(3IWL)** ±3.00˝W.C. **(5IWL)** ±5.00˝W.C. **(10IWL)** ±10.0˝W.C. **(15IWL)** ±15.00˝W.C. **(20IWL)** ±20.00˝W.C. **(25IWL)** ±25.00˝W.C. **(50IWL)** ±50.00˝W.C. **(100IWL)** ±100.00˝W.C.
7. **Optional X-Variation (XFM)** FM Approval Option (Includes all options in list)

ASHCROFT®

## DIMENSIONS (in inches)

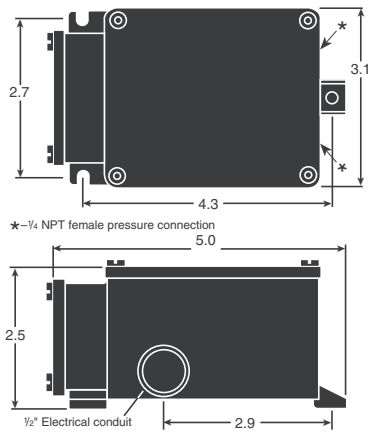


## Load Limitations 4-20mA Output Only

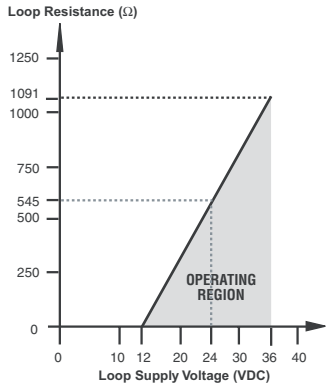


$V_{min}$ = 12V+ (.022A x $R_L$)

$R_L$ = $R_S$ + $R_W$

$R_L$ = Loop Resistance (ohms)

$R_S$ = Sense Resistance (ohms)

$R_W$ = Wire Resistance (ohms)