ASHCROFT®

Type 5509
Differential Pressure Gauges

- ***±2.5% full scale accuracy***
- ***Stainless steel case***
- ***316 stainless steel wetted parts***
- ***Inches of water differential ranges with 145 psi static pressure***
- ***External zero adjust***
- ***Available with open or solid front case styles***
- ***Optional liquid-filled case***
- ***4˝(100mm) or 6˝(160mm) dial sizes***

The Ashcroft® Type 5509 differential pressure gauge comes standard with 316SS wetted parts. This rugged gauge features an external zero adjust feature standard.

PRODUCT SPECIFICATIONS

GENERAL DIFFERENTIAL PRESSURE MEASUREMENT SPECIFICATIONS

Accuracy
±2.5% full scale

Dial Size
4˝(100mm) or 6˝(160mm)

Case and Ring
304 stainless steel open front case with a bayonet ring (solid front optional)

Dial
White painted aluminum with black markings

Pointer
Black painted aluminum with external adjust feature standard (to 25% of range)

Window
Shatterproof glass

Diaphragm Material
316 stainless steel for ranges 15 psi and above. High strength cobalt alloy (Duratherm 600) for ranges below 15 psi

Housing Material
316 stainless steel with a Viton O-ring

Socket Location
1/4 NPTF or 1/2 NPTF lower (female)

Range
0-10 IWD (inches of water differential) to 400 psid

Static Pressure
From 10 IWD to 3 psi – static pressure 145 psi
5 psi and above – static pressure 360 psi

Options

	Code
Glycerin fill	(L)
Silicone fill	(XGV)
Weatherproof/Hermetically sealed case	(H)
Wall mounting bracket	(XFW)
Pipe mounting bracket	(XTM)
3-way manifold(1)	(X43)
Electric warning contacts(1)	(X91)

(1) Specify contact arrangement. Specify if magnetic or inductive contacts.

Viton® is a registered trademark of DuPont Co.

STANDARD RANGES*

psid	mBar	bar	I.W.D.
3	40	0.6	10
5	60	1.0	30
10	100	1.6	60
15	160	2.5	100
30	250	4	200
60	400	6	
100		10	
160		16	
200		25	
300			
400			

*Other ranges on application

TO ORDER THIS MODEL 5509 DIFFERENTIAL PRESSURE GAUGE:

10	5509	S	S	02L	XXX	0/100 psid

Select:

1. Dial size – 100mm, 160mm
2. Type
3. 316 SS diaphragm
4. 316 SS housing and socket
5. Connection size and location 1/4 NPTF lower
6. Optional features
7. Pressure range

ASHCROFT®

DIMENSIONS

For Ranges 10 IWD to 300 psi

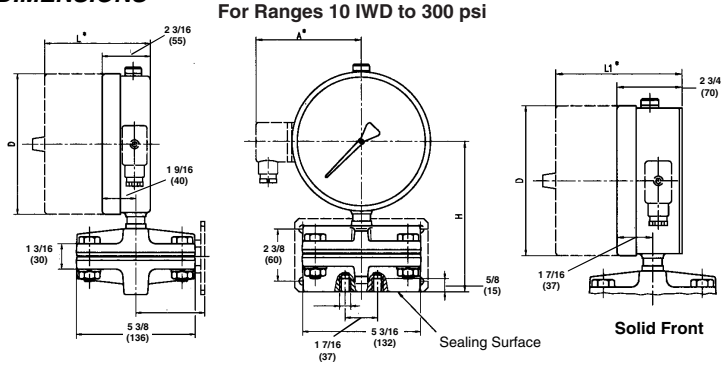

For Ranges 5 psi to 300 psi

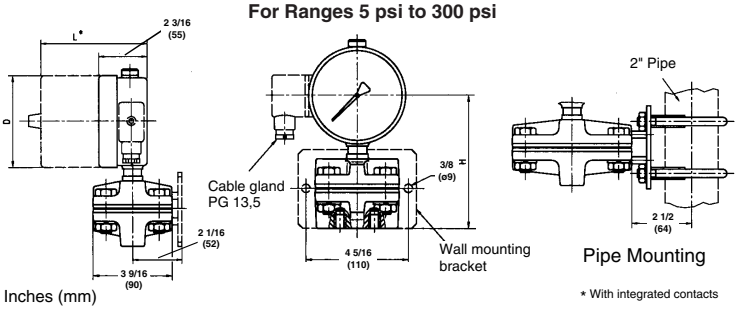

Inches (mm)

* With integrated contacts

			With Electric Contacts		
Dial Size	D	H	A	L	L1
4 (100)	4 (101)	5 ½ (140)	3 ⅜ (86)	3 ¾ (95)	4 ⅜ (111)
6 (160)	6 ⅜ (161)	6 11/16 (170)	4 ¾ (120)	4 ⅛ (105)	4 ¾ (121)